REVERSIBLE VIBRATORY PLATE

RANGE SERIES

LIGHTWEIGHT PLATES UP TO 200 KG

Designed to provide high handling comfort with high performance. Thanks to it these machines cover the widest range of service and maintenance work and small-scale work.

Drive control
Implemented to the handle.

Throttle lever
Integrated to the handle.

Lifting eye
For easy handling.

Vibration reduction
Three-staged vibration reduction affords high working comfort without any limits of occupational exposure.

Hydraulic system
Fully hydraulic control system with automatic venting and hydraulic circuit adjustment.

Handling points
Accessible from all sides of the machine.

Full frame design
Ensures high level of protection for sensitive parts.

Engine
Available with Honda GX series and Hatz B series (VDR 26H).

Rounded edges
Plate does not leave any marks during compaction of asphalt.

NTC STAVEBNÍ TECHNIKA SPOL. S.R.O.
Jiřinková 120 552 03 Česká Skalice | Czechia

WWW.NTC.CZ

CZECH MADE

REVERSIBLE VIBRATORY PLATE | RANGE SERIES

VDR 26

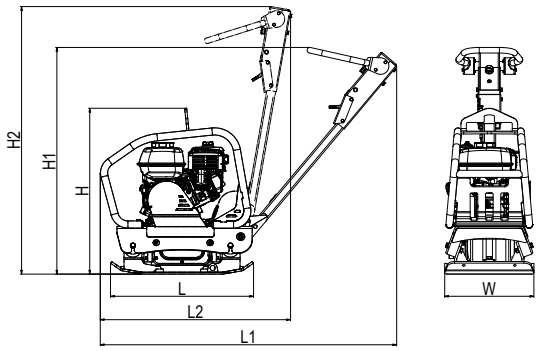

TYPE	Machine dimensions (mm)						
VDR 26	H	H1	H2	L	L1	L2	W
	680	1000	1100	700	1220	715	450

TECHNICAL PARAMETERS

OPERATIONAL PARAMETERS		
Operational weight	[kg]	160
Plate dimensions (W x L)	[mm]	450 x 700
Centrifugal force	[kN]	26
Frequency	[Hz]	95
Amplitude	[mm]	2
Area performance	[m²/hod]	594
Climbability	[%]	30
Maximal speed	[m/min]	22
ENGINE		
Maker and type	Honda	GX 200
Fuel	[-]	Petrol
Net power (3600 r./min)	[kW]	4,1
Emission class	[-]	EU Stage V
OPERATIONAL FLUIDS		
Fuel tank capacity (petrol)	[l]	3,1
Engine oil capacity (10W30)	[l]	0,6
Hydraulic oil capacity (OH-HV 68)	[l]	0,2
Exciter oil capacity (10W30)	[l]	0,4
HYGIENE PARAMETERS		
Noise level $L_{pA,d}$	[dB]	91+4
Noise level $L_{WA,G}$	[dB]	105
Vibration a_{hvd}	[m/s²]	3,2+1,6

FEATURES

- Frame design
- Folding handle
- Central lifting eye
- Three-staged vibration reduction
- Handling points on all sides of the machine
- Rounded edges of the plate
- Trottle lever on the handle

OPTIONAL ACCESSORIES

- Sprinkling kit **(capacity of the tank 10 l)** ○
- Soft pad for pavement compaction ○
- Wheel kit for easy handling ○
- Hour counter ○

NTC STAVEBNÍ TECHNIKA SPOL. S.R.O.
Jiřinková 120 552 03 Česká Skalice | Czechia

WWW.NTC.CZ

CZECH MADE