REVERSIBLE VIBRATORY PLATE

PRIM SERIES

MIDWEIGHT PLATES 200 - 300 KG

Our midweight reversible vibratory plates stands for the most useful machine for medium-scale construction work in our product range. Suitable for conditions where light machines are not powerful enough, but heavy machines would not use all their entire potential.

Drive control
Implemented to the handle.

Lifting eye
For easy handling.

Vibration reduction
Three-staged vibration reduction affords high working comfort without any limits of occupational exposure.

Full frame design
Ensures high level of protection for sensitive parts.

Hydraulic system
Fully hydraulic control system with automatic venting and hydraulic circuit adjustment.

Service points
Easy access to service points thanks to the open frame.

Throttle lever
Integrated to the handle.

Engine
Available with Honda GX series and Hatz B series (VDR 32H)

Resistant plate
Made of rolled steel.

NTC STAVEBNÍ TECHNIKA SPOL. S.R.O.
Jiřinková 120 552 03 Česká Skalice | Czechia

WWW.NTC.CZ

CZECH MADE

REVERSIBLE VIBRATORY PLATE | PRIME SERIES

VDR 32

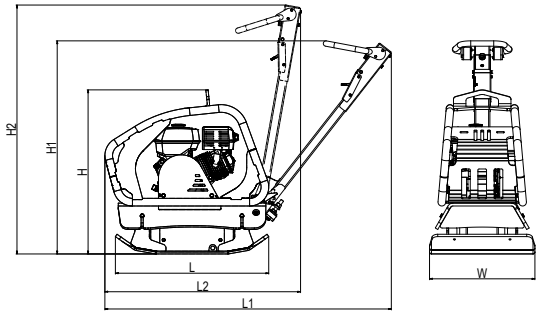

TYPE	Machine dimensions (mm)						
VDR 32	H	H1	H2	L	L1	L2	W
	710	1040	1130	750	1300	800	500

TECHNICAL PARAMETERS

OPERATIONAL PARAMETERS		
Operational weight	[kg]	210
Plate dimensions (W x L)	[mm]	500 x 750
Centrifugal force	[kN]	32
Frequency	[Hz]	90
Amplitude	[mm]	2
Climbability	[%]	30
Area performance	[m²/h]	660
Maximal speed	[m/min]	22
ENGINE		
Maker and type	Honda	GX 200
Fuel	[-]	Petrol
Net power (3600 r./min)	[kW]	4,1
Emission class	[-]	EU Stage V
OPERATIONAL FLUIDS		
Fuel tank capacity (petrol)	[l]	3,1
Engine oil capacity (10W30)	[l]	0,6
Hydraulic oil capacity (OH-HV 68)	[l]	0,2
Exciter oil capacity (10W30)	[l]	0,4
HYGIENE PARAMETERS		
Noise level $L_{pA,d}$	[dB]	87+3
Noise level $L_{WA,G}$	[dB]	105
Vibration a_{hvd}	[m/s²]	8,6+3,5

FEATURES

- Frame design
- Folding handle
- Central lifting eye
- Three-staged vibration reduction
- Handling points on all sides of the machine
- Rounded edges of the plate
- Trottle lever on the handle

OPTIONAL ACCESSORIES

- Sprinkling kit **(capacity of the tank 10 l)** ○
- Soft pad for pavement compaction ○
- Wheel kit for easy handling ○
- Hour counter ○

NTC STAVEBNÍ TECHNIKA SPOL. S.R.O.
Jiřinková 120 552 03 Česká Skalice | Czechia

WWW.NTC.CZ

CZECH MADE