REVERSIBLE VIBRATORY PLATE

DUTY SERIES

HEAVYWEIGHT PLATES 300 - 500 KG

The Duty series vibratory plates are presented as the most efficient machines in the category of vibratory plates. Thanks to optimized, interconnected parameters, they achieve the highest cumulative area performance in this category.

Lifting eye
Centrální závěsné oko pro snadnou manipulaci.

Throttle lever
Integrated to the handle.

Service points
Easy access to service points thanks to the service hatches.

Vibration reduction
Four-staged vibration reduction affords high working comfort without any limits of occupational exposure.

Drive control
Implemented to the handle.

Frame design
A high level of coverage ensures protection in the most demanding conditions.

Hydraulic system
Fully hydraulic control system with automatic venting and hydraulic circuit adjustment.

Engine
Available with Honda GX series and Hatz B series.

Resistant plate
Made of rolled steel.

NTC STAVEBNÍ TECHNIKA SPOL. S.R.O.
Jiřinková 120 552 03 Česká Skalice | Czechia

WWW.NTC.CZ

CZECH MADE

REVERSIBLE VIBRATORY PLATE | DUTY SERIES

VDR 52HE

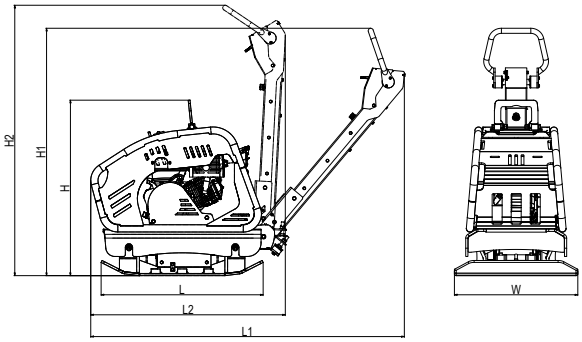

TYPE	Machine dimensions (mm)						
VDR 52HE	H	H1	H2	L	L1	L2	W
	940	1055	1400	815	1420	1150	600

TECHNICAL PARAMETERS

OPERATIONAL PARAMETERS

Operational weight	[kg]	370
Plate dimensions (W x L)	[mm]	600 x 815
Centrifugal force	[kN]	52
Frequency	[Hz]	75
Amplitude	[mm]	2
Maximal speed	[m/min]	28
Electric start	[-]	Yes

ENGINE

Maker and type	Hatz	1 B 30
Fuel	[-]	Diesel
Net power (3600 r./min)	[kW]	5,0
Emission class	[-]	EU Stage V

OPERATIONAL FLUIDS

Fuel tank capacity (diesel)	[l]	5
Engine oil capacity (10W30)	[l]	0,9
Hydraulic oil capacity (OH-HV 68)	[l]	0,28
Exciter oil capacity (10W30)	[l]	0,5

TECHNICAL PARAMETERS

HYGIENE PARAMETERS

Noise level $L_{pA,d}$	[dB]	94+2
Noise level $L_{WA,G}$	[dB]	108
Vibration a_{hvd}	[m/s²]	10,2+4,1

FEATURES

- Frame design
- Folding handle
- Central lifting eye
- Three-staged vibration reduction
- Handling points on all sides of the machine
- Rounded edges of the plate
- Trottle lever on the handle
- Electric start

OPTIONAL ACCESSORIES

Soft pad for high-load-paving compaction	○
Hour counter	○

NTC STAVEBNÍ TECHNIKA SPOL. S.R.O.
Jiřinková 120 552 03 Česká Skalice | Czechia

WWW.NTC.CZ

CZECH MADE