WALK-BEHIND VIBRATORY ROLLERS

STANDARD SERIES

FOR THE PERFECT SURFACES

Series of walk-behind vibratory rollers for universal use for compaction of soils or asphalt. During the development of the first model in 1998 we used unique concept new to the world by which we significantly reduced the system energy losses. Since then this concept become the standard for all our future models of walk-behind rollers.

Steel water tank
Durable water tank for sprinkling system with capacity of 30 l.

Drive control
Implemented to the handle.

Lifting eye
For easy handling.

Engine
Available with Honda GX series and Hatz B series.

Additional handles
For even more convenient machine control.

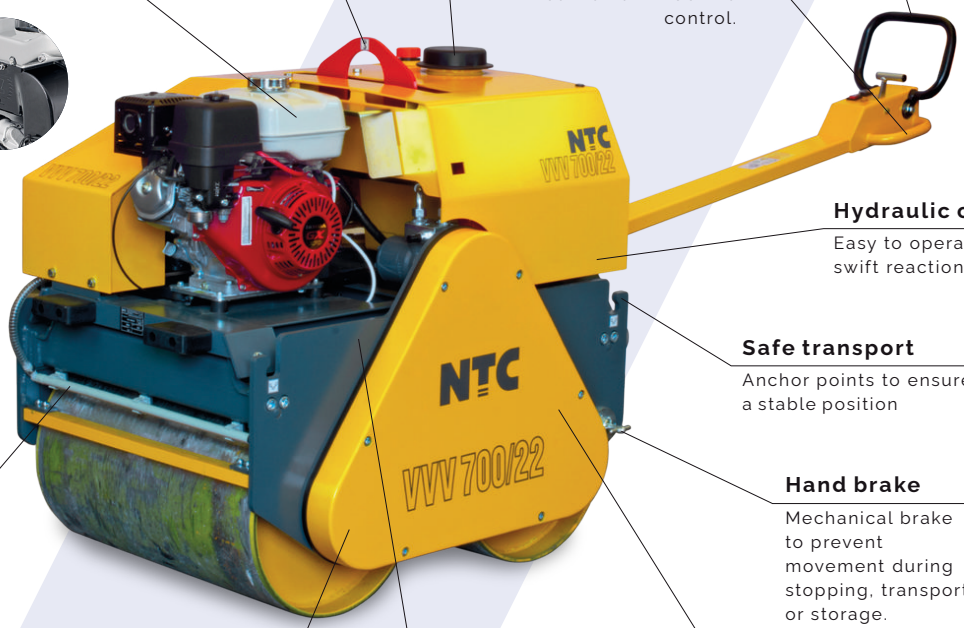

Hydraulic control
Easy to operate with swift reaction.

Safe transport
Anchor points to ensure a stable position

Sprinkling system
Standard accessories with separate valve for each drum.

Hand brake
Mechanical brake to prevent movement during stopping, transport or storage.

Electromagnetic clutch
Minimizes energy losses during exciter operation.

Central drive
Maintenance free chain-driven drive.

Central exciter
Non-directed exciter optimally distributes the compacting force to both drums.

NTC STAVEBNÍ TECHNIKA SPOL. S.R.O.
Jiřinková 120 552 03 Česká Skalice | Czechia

WWW.NTC.CZ

CZECH MADE

WALK-BEHIND VIBRATORY ROLLERS | STANDARD SERIES

VVV 600/12

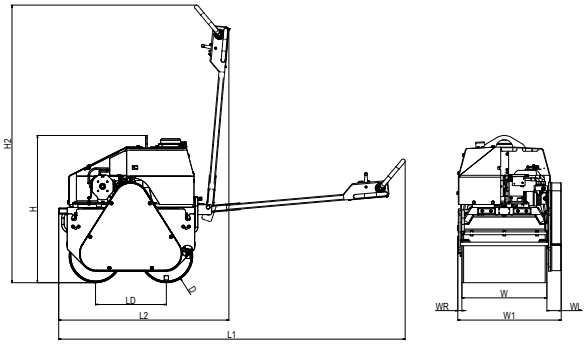

TYPE	Machine dimensions (mm)				
VVV 600/12	H	H2	L1	L2	LD
	1040	1880	2270	1085	500
	D	W	W1	WR	WL
	372	600	730	30	100

TECHNICAL PARAMETERS

OPERATIONAL PARAMETERS

Operational weight	[kg]	560
Drums width	[mm]	600
Drums diameter	[mm]	372
Centrifugal force	[kN]	12
Frequency	[Hz]	60
Amplitude	[mm]	0,6
Forward speed	[km/h]	0-5
Reverse speed	[km/h]	0-2
Area performance	[m^2/h]	3000
Climbability	[%]	40
Drum overlap left	[mm]	100
Drum overlap right	[mm]	30
Electric start	[-]	No

ENGINE

Maker and type	Honda	GX 200
Fuel	[-]	Petrol
Net power (3600 r./min)	[kW]	4,1
Cooling	[-]	Air
Emission class	[-]	EU Stage V

TECHNICAL PARAMETERS

OPERATIONAL FLUIDS

Water tank capacity	[l]	30
Fuel tank capacity (petrol)	[l]	3,1
Engine oil capacity (10W30)	[l]	0,6
Exciter oil capacity (10W30)	[l]	0,12
Hydraulic oil capacity (OH-HV 68)	[l]	9

HYGIENE PARAMETERS

Noise level $L_{pA,d}$	[dB]	81+4
Noise level $L_{WA,G}$	[dB]	105
Vibration a_{hvd}	[m/s^2]	5,14+2,06

FEATURES

- Central lifting eye
- Anchor points on all sides of the machine
- Additional handles
- Sprinkling system
- Steel water tank
- Hand brake
- Central exciter
- Electromagnetic clutch

OPTIONAL ACCESSORIES

Hour counter	○

NTC STAVEBNÍ TECHNIKA SPOL. S.R.O.
Jiřinková 120 552 03 Česká Skalice | Czechia

WWW.NTC.CZ

CZECH MADE